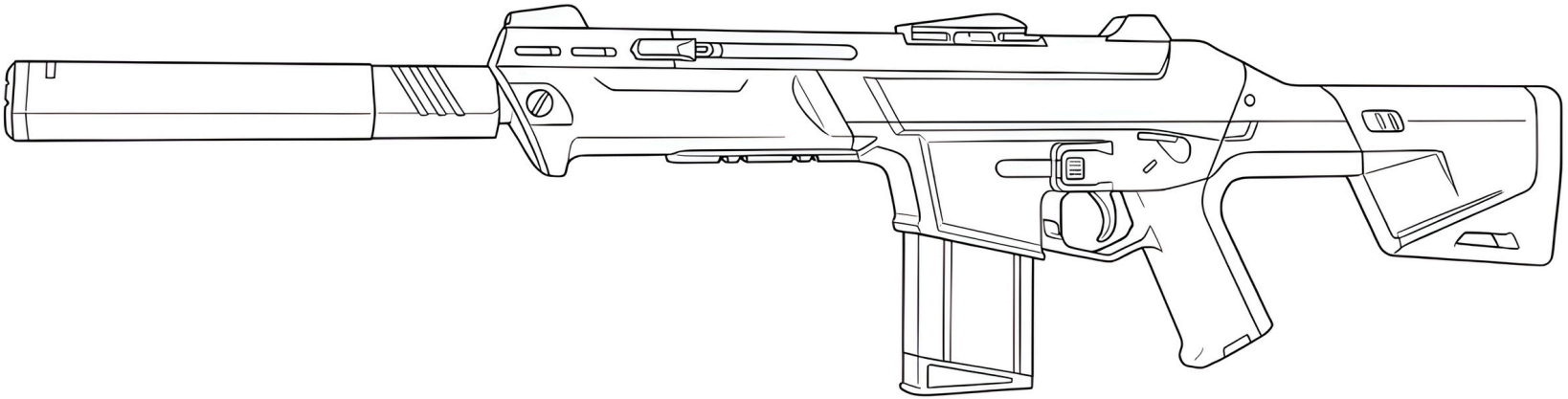

Download more free printable coloring pages at **HotColoringPages.Com**

Color Palette: try your crayons